How To Use and Care For Your

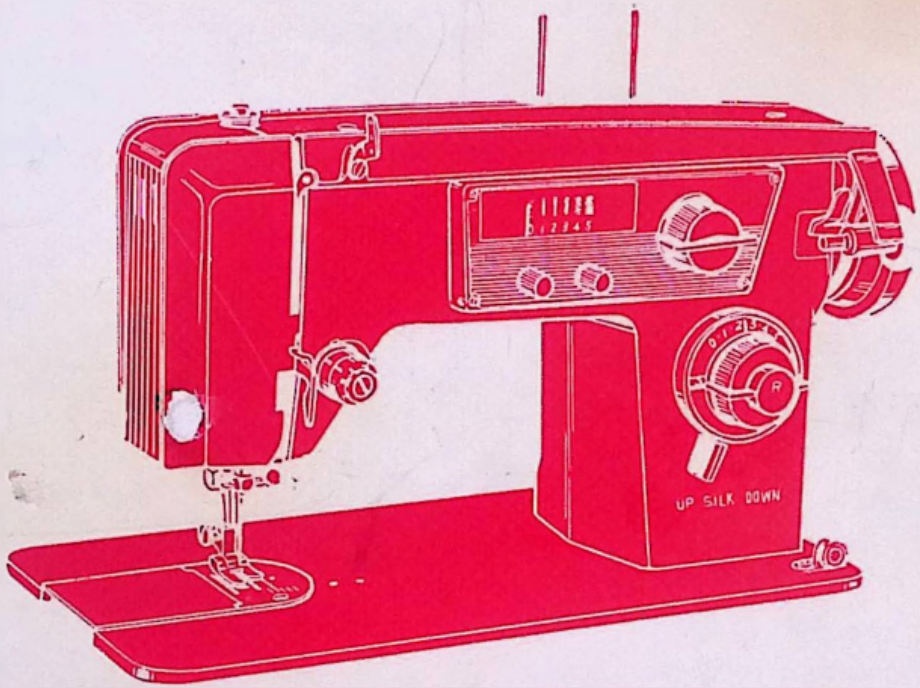

Zig-zag Sewing Machine

MODEL KNS

INDEX

PAGE

Features and Parts 2-4
Needle and Thread Chart 5
Winding the Bobbin 6
Threading the Bobbin Case 6-7
Placing Bobbin Case in Shuttle 7-8
Inserting the Needle 8
Upper Threading 9-10
Setting the Stitch Length 10
Stitch Length Chart 10
Sewing in Reverse 10
Straight Stitching 11
Adjusting the Tensions 11-12
Adjusting Pressure and Feed 12
General Sewing 12
Light Weight Fabrics 13
Darning and Monogramming 13
Preparing to Sew 14
Removing the Work 14
Adjusting the Stitch Widths 15
Zigzag Stitch Patterns 16
Making Buttonholes 16-17
Sewing on Buttons 18
Embroidering with a Hoop 19
Cording & Zipper Foot 19-20
Narrow Hemmer 20-21
Lace Trimmed Hem 20
Quilting Guide 21
Seam Gauge 21
Care and Maintenance 22
Oiling 22
Cleaning and Oiling Shuttle 23
Check Up for Smooth Sewing 24
Accessories 25
Names of Parts 26-31

FEATURES AND PARTS
(Front View)

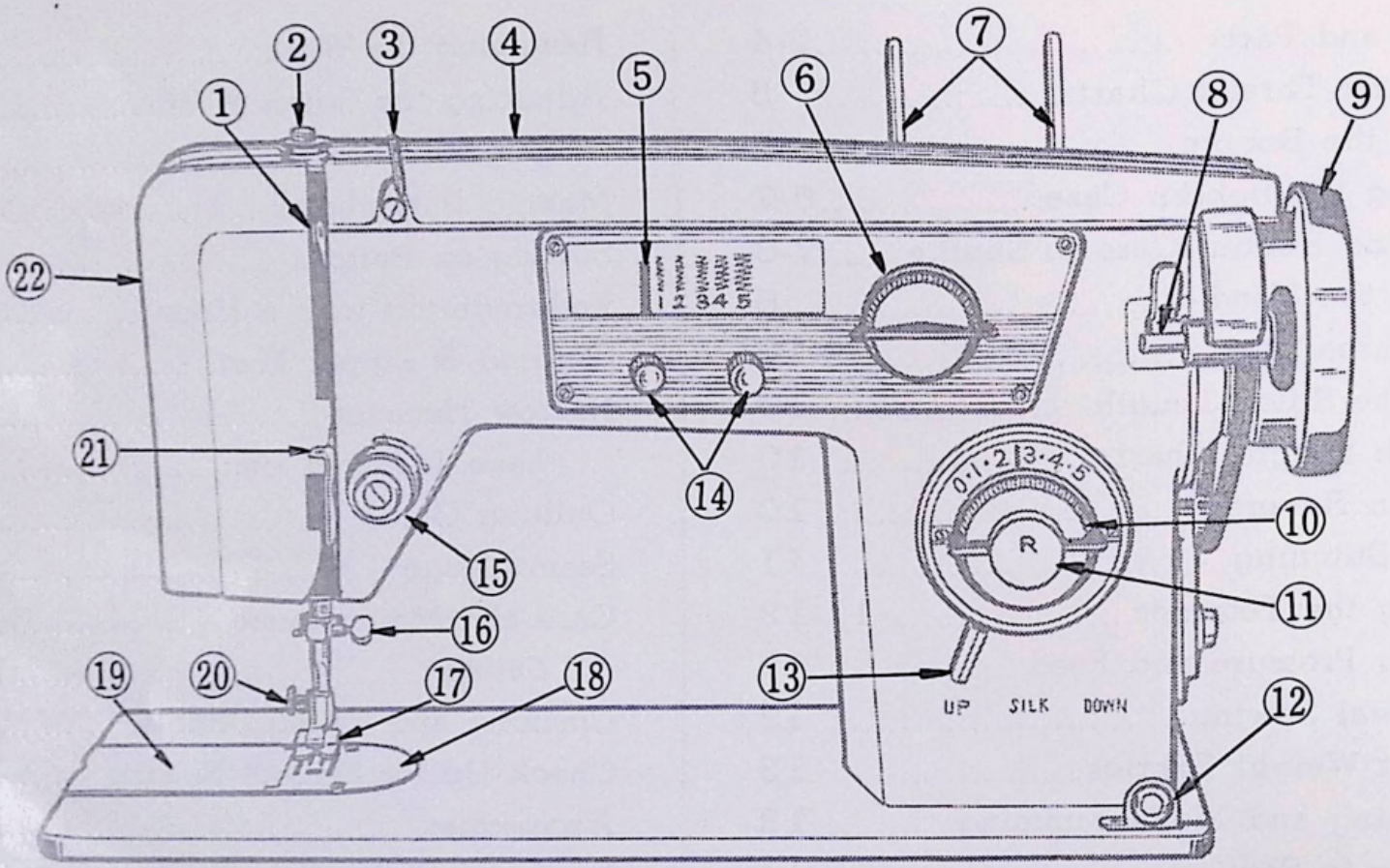

Fig. 1

NAMES OF EACH PARTS

1. Thread Take-up Lever
2. Patchomatic Darner
3. Arm Thread Guide
4. Top Plate
5. Zigzag Width Indicator
6. Zigzag Width Control Dial
7. Spool Pins
8. Bobbin Winder Spindle
9. Hand Wheel
10. Stitch Length Control Dial
11. Reverse Push Button
12. Bobbin Winder Tension Disc
13. Drop Feed Lever
14. Zigzag Width Restricting Knob
15. Upper Thread Tension Regulator Dial
16. Needle Clamp Screw
17. Presser Foot
18. Needle Plate
19. Bobbin Case Cover Plate
20. Presser Foot Thumb Screw
21. Thread Guides
22. Face Plate

FEATURES AND PARTS

(Back View)

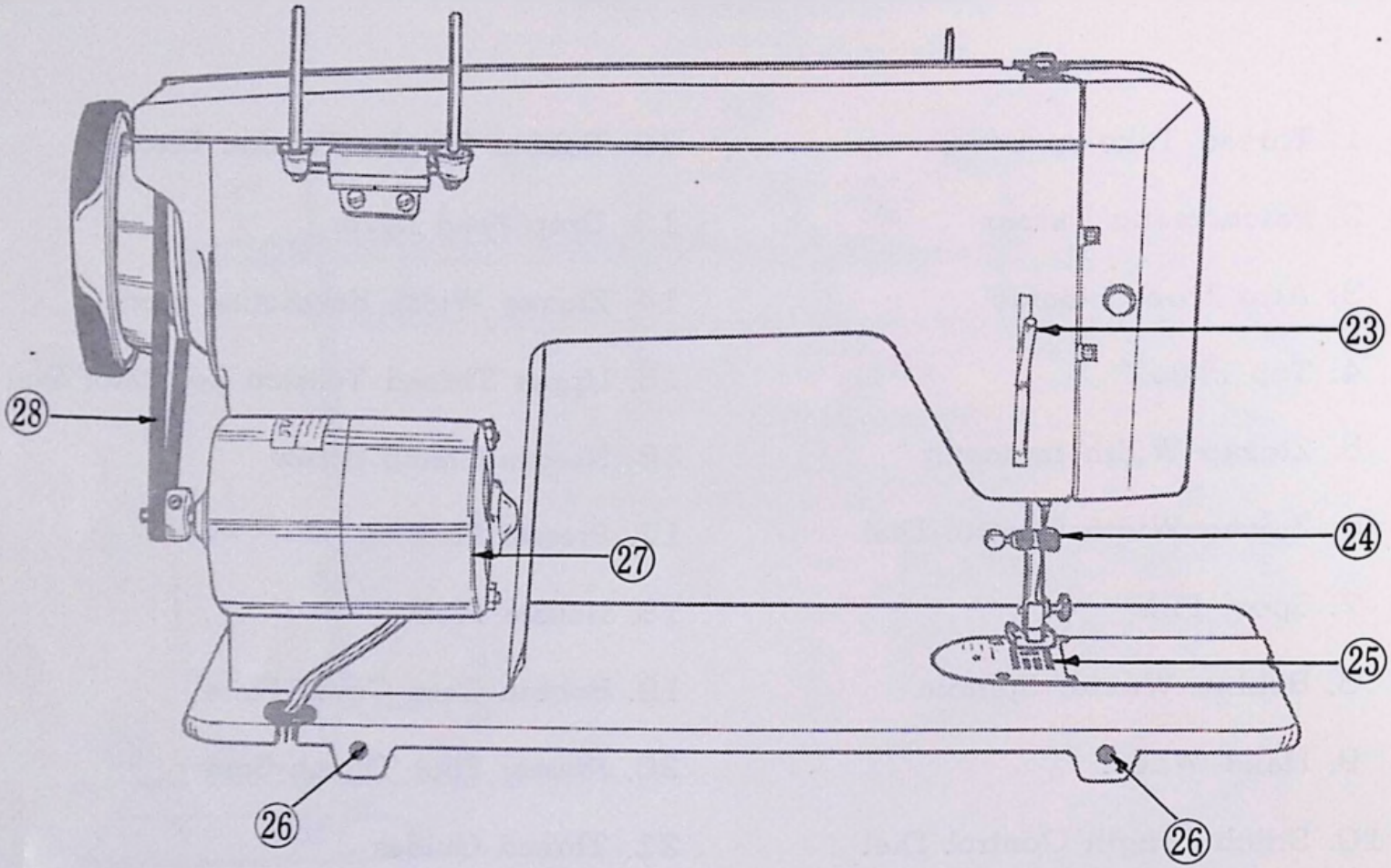

Fig. 2

23. Presser Bar Lifter 24. Thread Cutter 25. Feed 26. Head Hinge Mounting Holes
27. Sewing Motor 28. Motor Betlt

NEEDLE-THREAD-FABRIC-STITCHING GUIDE

Fabric	Needle No.	Machine Stitches Per Inch	Cotton Thread	Mercerized Thread	Silk or Nylon
Extremely heavy tarpaulin, sacking, canvas, duck, etc.	19	6 to 8	10 to 30	Heavy Duty	
Heavy upholstery fabric, ticking, denim, leatherette	18	8 to 10	30 to 40	Heavy Duty	
Medium heavy drapery fabric, velveteen, suiting, felt terry, etc.	16	10 to 12	40 to 60	Heavy Duty	
Medium broadclcth, percale, gingham, linen, chintz, taffeta, shee wool, shantung, etc.	14	12 to 14	60 to 80	50	A
Sheer voile, lawn, dimity, crepe, handkerchief linen, plastic Film, etc.	11	14 to 16 (Plastic film) (8to10)	80 to 100	50	A
Very sheer chiffon, batiste, lace, organdy, ninon, net, marquisette, etc.	9	16 to 20	100 to 150	50	A

WINDING THE BOBBIN

Disengage the hand wheel (Fig. 3) from the stitching mechanism by turning the clutch toward you or counter-clockwise.

Raise the presser bar lifter (㉓, Fig. 2). Place a spool of thread on the spool pins (Fig. 4), lead thread through the upper thread guide, down between tension discs from left to right, and through the tension discs at the base of the machine. Run end of thread through a hole in the bobbin edge and place bobbin on spindle of bobbin winder, fitting the notch on bobbin over small pin on spindle. Push bobbin winder latch 'Hold thread end loosely and start machine slowly.

Bobbin will stop winding when it is filled. Turn clutch away from you until sewing mechanism is again engaged so that needle moves when you turn the hand wheel.

Break off loose thread end used to start the winhing.

THREADING THE BOBBIN CASE

Step 1 (illustrated in Fig. 5). Hold bobbin case between thumb and forefinger of left hand, so that the slot in the edge of the bobbin case is on top. Take the bobbin between thumb and forefinger of right hand so that the thread on top leads from left to right.

Fig. 3

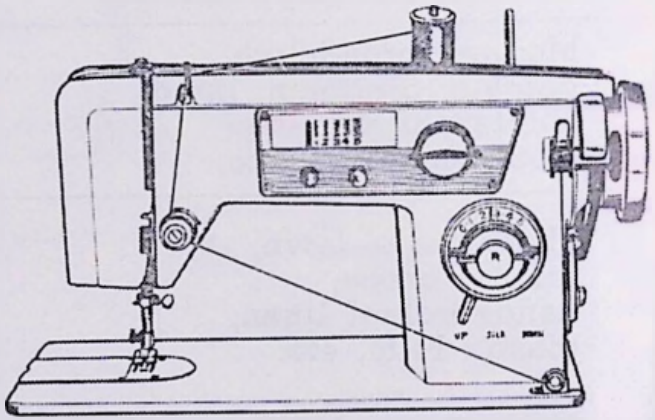

Fig. 4

Step 2. Insert bobbin into bobbin case, pull the thread into the slot of the bobbin case as shown in Fig. 6, and draw it under the tension spring and into the forkshaped opening of the spring as shown in Fig. 7.

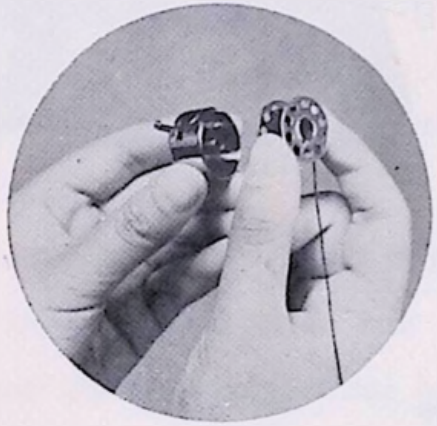

Fig. 5

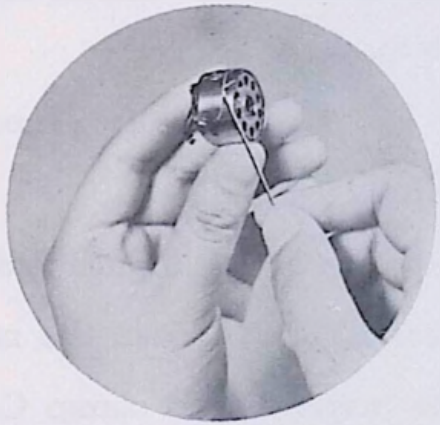

Fig. 6

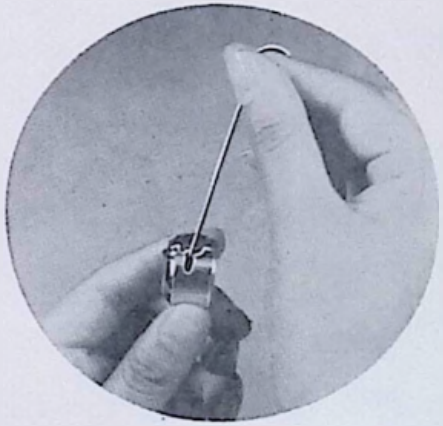

Fig. 7

PLACING BOBBIN CASE IN SHUTTLE

Open cover plate left of the needle. Hold the bobbin case latch, (A), Fig. 8, between the thumb and forefinger of the left hand, with at least three inches of thread running from the top of the bobbin case to the right. Insert and center the bobbin case on the stud of the shuttle body, (B). Be sure the bobbin case finger, (C), is opposite shuttle race notch, (D).

Press the bobbin case (E) into the shuttle as far as possible until latch catches on the center post of the shuttle. THEN release the bobbin case latch, (A). Press bobbin case again after latch has been released to make sure the bobbin case is locked securely in place. Close the cover plate.

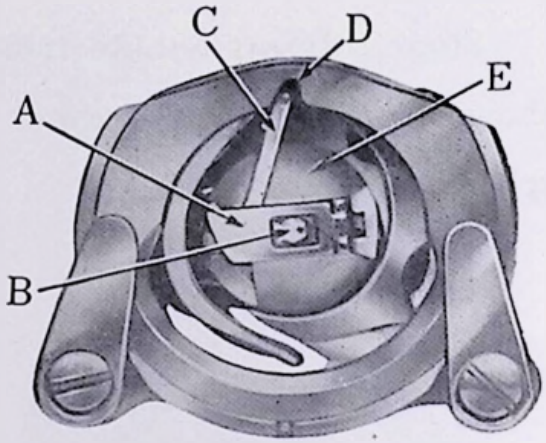

Fig. 8

INSERTING THE NEEDLE

See Fig. 9. Raise the needle bar A to its highest point, turning hand wheel toward you by hand. Then loosen the needle clamp screw B and the needle can be inserted into clamp C. Place needle (flat side to right) in the needle clamp and push it upward as far as it will go into the needle clamp hole, tightening the needle clamp screw.

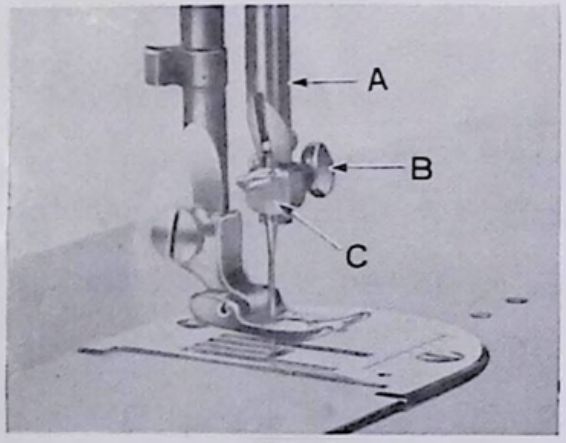

Fig. 9

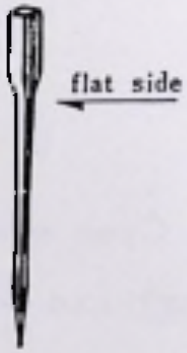

After changing the needle make one complete revolution of the hand wheel by hand to be sure the needle is in the correct position.

UPPER THREADING

1) Place spool of thread on upper spool pin.
2) Lead thread through hole in arm thread guide
3) down between tension discs from right to left
4) into the check spring over tension discs
5) under thread guide bar
6) up through thread bar hole
7) up into take-up lever from right to left
8) down through thread bar hole again
9) into guide inside face plate
10) through the needle thread guide
11) and into needle from left to right.

Pull three or four inches of thread through needle.

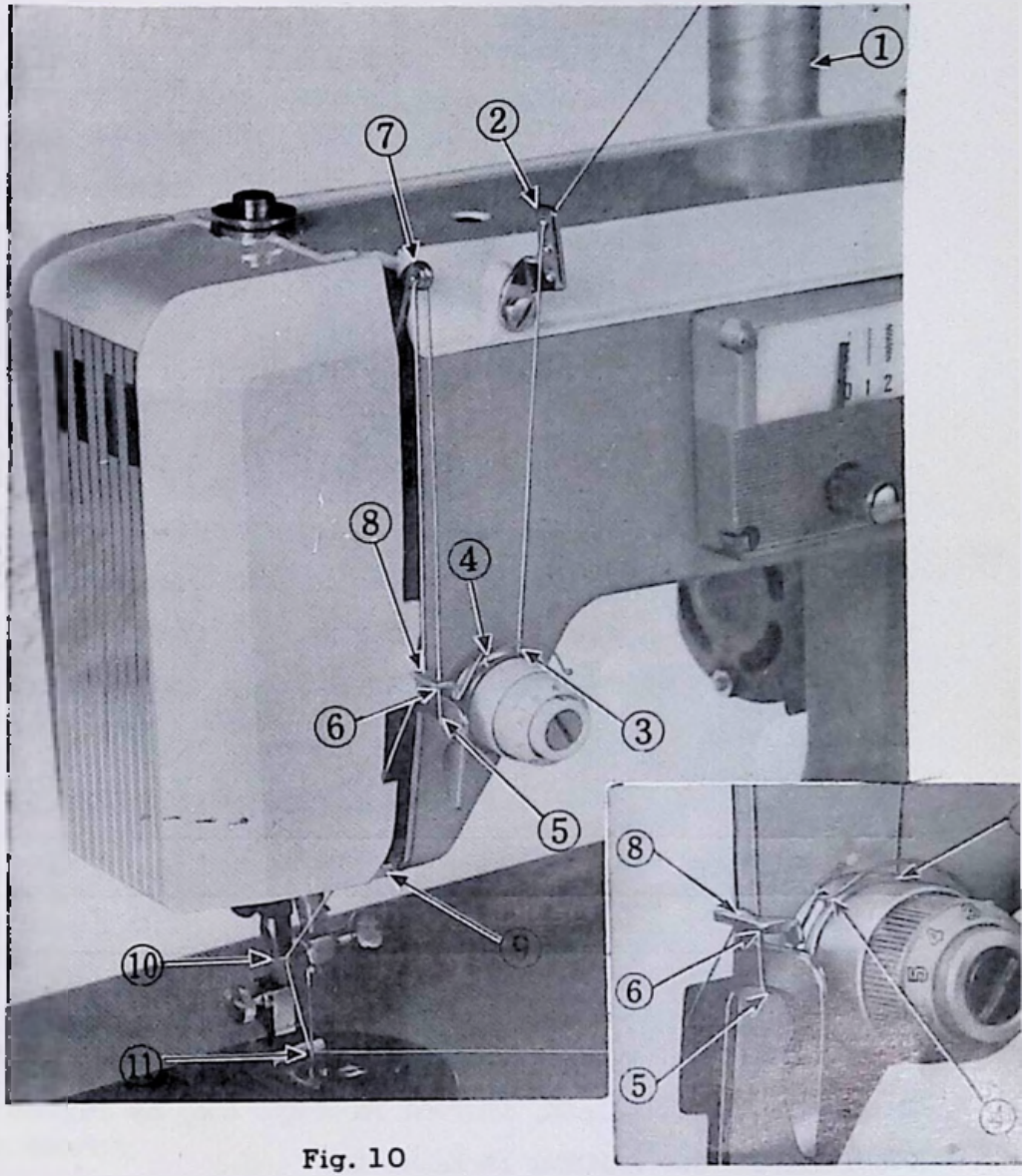

Fig. 10

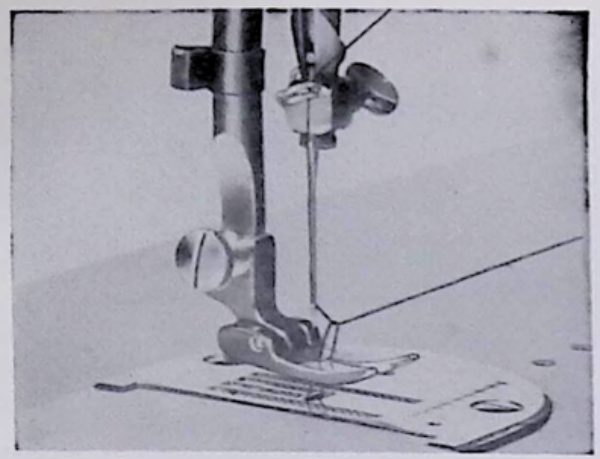

Fig. 11

Hold the end of upper thread loosely and turn hand wheel toward you until the needle goes all the way down and comes back up. A loop (Fig. 11) will be formed over the upper thread which then can be pulled out straight. Place both thread ends under the slot of the presser foot and draw toward the back of the machine, leaving both threads three or four inches long.

SETTING THE STITCH LENGTH

The length of the stitch is regulated by the stitch length dial, A, shown in Fig. 12. Near 0 is the shortest stitch and 5 is the longest, but the dial may be set at any spot between markings for a variety of lengths. Turn the dial to the right to lengthen and to the left to shorten the stitch. The number of the stitch length you choose should appear on indicator on the dial.

STITCH LENGTH CHART (Approximate)

Figures on indicator	0	1	2	3	4	5
Number of stitches per inch	No Feeding	30	15	10	7	6

SEWING IN REVERSE

When you wish to sew backward to tie the threads at the baginning or end of a seam, press in button R, B, shown in Fig. 12, as far as it will go. The machine will sew backward as long as the button is held in.

STRAIGHT STITCHING

Be sure to set the stitch width at "O" and to tighten the restricting knob.

Adjust the pitch so that you can get your desired stitch length and then you can start sewing straight.

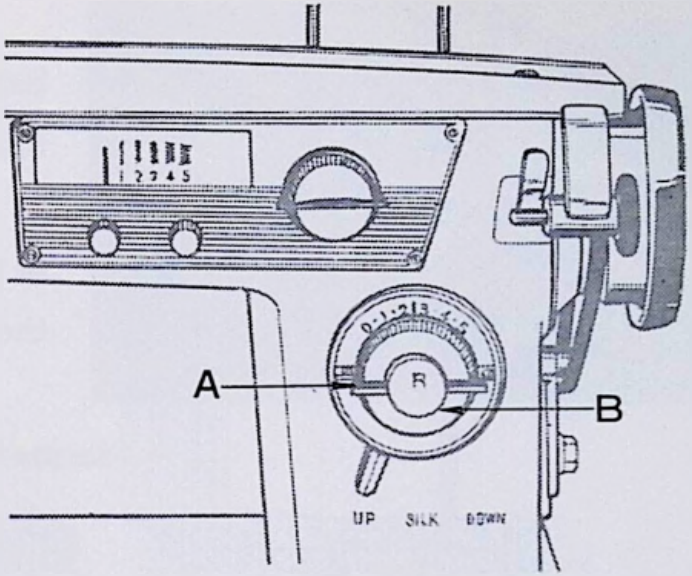

Fig. 12

ADJUSTING THE TENSIONS

Always adjust the upper tension with the presser foot down, as the tension is released when it is raised. To increase the tension on the upper thread, turn dial (Fig. 13) to the right, or clockwise. To decrease, turn to the left. The higher the number on the dial, the tighter the tension.

Before adjusting lower tension be sure that the machine is threaded properly. When necessary to change the bobbin tension, turn small screw (Fig. 14) on side of the bobbin case clockwise to tighten, counterclockwise to loosen.

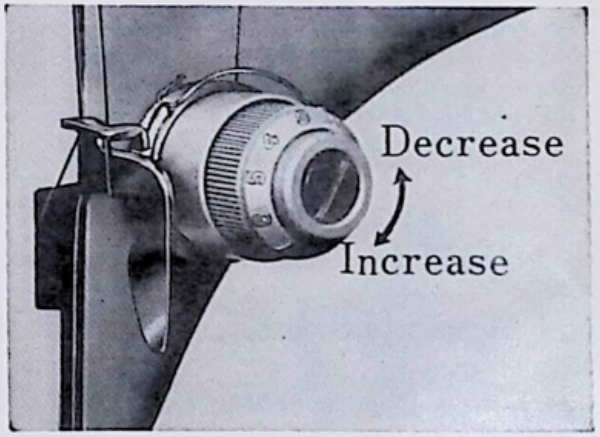

Fig. 13

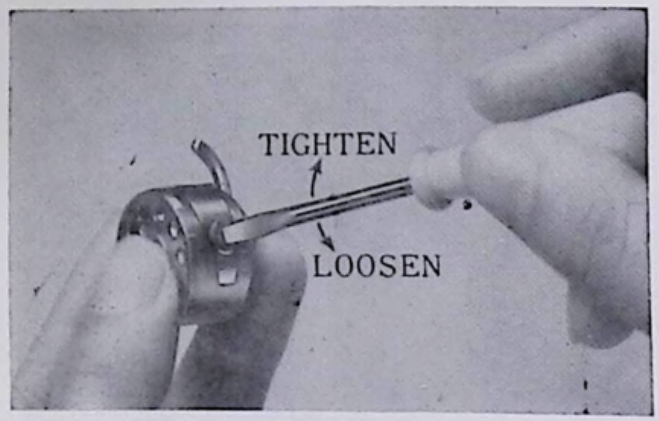

Fig. 14

When the upper and lower tensions are properly balanced, a perfect stitch will be formed with both threads interlocking in fabric (Fig. 15).

When the upper tension is too tight, the lower thread is pulled up over the upper thread which is lying flat on the fabric (Fig. 16).

When the upper tension is too loose, the upper thread forms loops over the lower thread flat under the fabric (Fig. 17).

Fig. 15

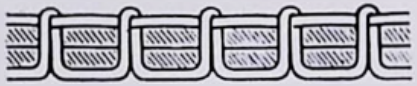

Fig. 16

Fig. 17

ADJUSTING PRESSURE AND FEEDING OF FABRIC

GENERAL SEWING. Usually for straight sewing and zigzag stitching, the pressure bar cap or darner release, Fig. 19 and 20, is at its lowest position and the drop feed lever 14 Fig. 18, is seted to "UP".

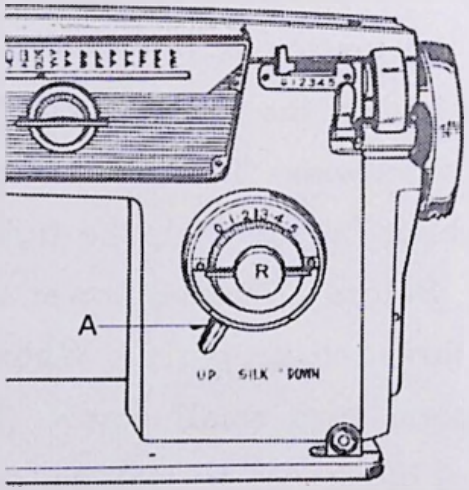

Fig. 18

SEWING THIN OR LIGHT WEIGHT FABRICS

When lighter pressure is required to sew satisfactorily on thin silk or filmy material, the pressure cap should be about halfway down.

Release all the way by pressing the snap lock, A, and then press cap B down again to halfway spot. Lower the feed slightly by setting the lever to "SILK"

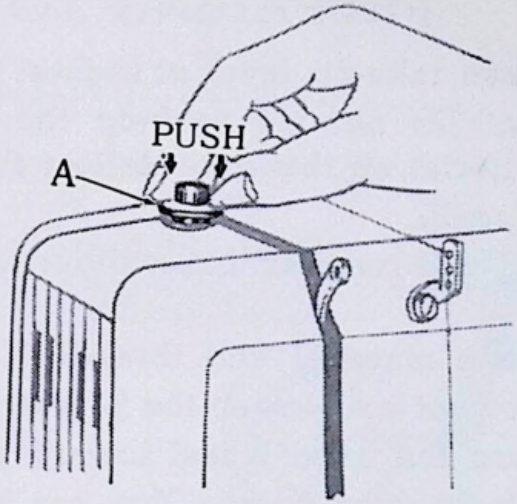

Fig. 19

DARNING AND MONOGRAMMING

In order to move the fabric freely in any direction for darning, mending and certain kinds of free-hand embroidery, release the pressure cap B completely by pressing down on the snap lock, A, Fig. 19. Set the lever to "DOWN", which drops the feed well below the needle plate. To return feed to normal, set to "UP", push cap down. (Fig. 20)

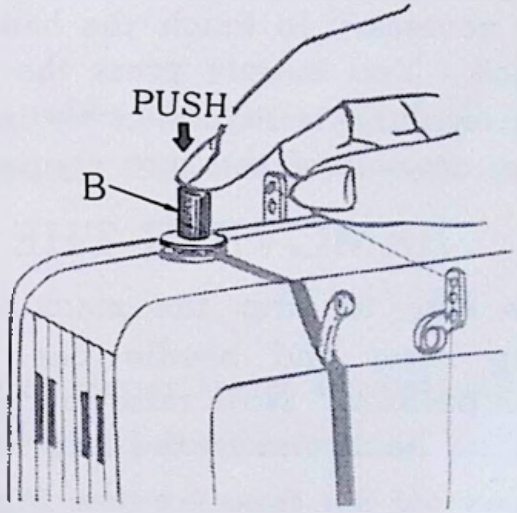

Fig. 20

PREPARING TO SEW

Have take-up lever at highest point before starting to sew. Do not try to help the feeding by pulling the material as this may deflect the needle and cause it to break.

NEVER run machine without material under presser foot.

Place material and threads in position under the presser foot and lower the presser foot.

Turn the hand wheel toward you until the needle is at its highest point. You are now ready to begin sewing. By having the needle at its highest point, it is not necessary to touch the hand wheel to start the machine. You merely press the control. The speed of he machine is regulated by increasing or decreasing the amount of pressure exerted on the control.

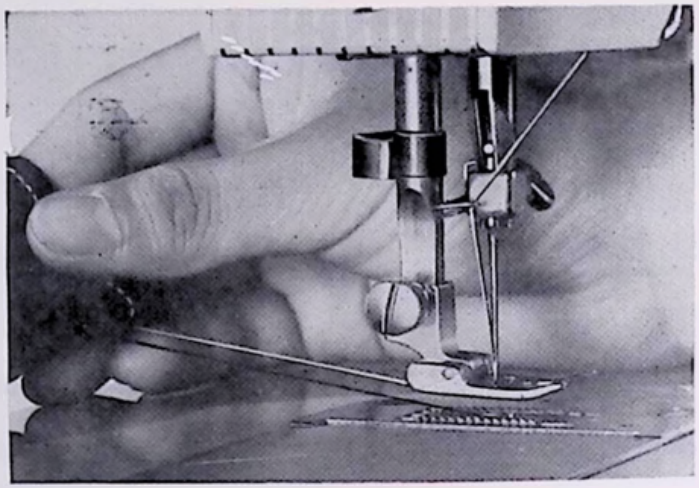

Fig. 21

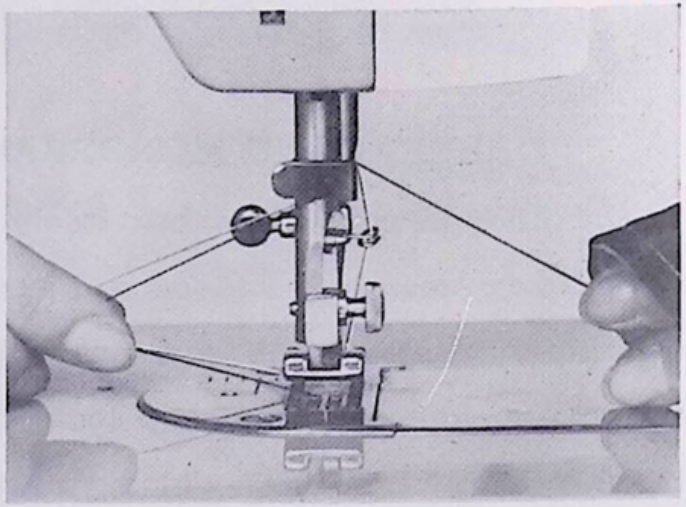

Fig. 22

REMOVING THE WORK

Be sure to stop the machine when the thread take-up lever and needle bar are located at the highest position. Now raise the presser foot and draw the fabric back and to the left, Fig. 21, and pass the threads over the thread cutter Fig. 22. Pull down slightly, holding thread in both hands, so as not to bend the needle. Leave the ends of thread under the presser foot.

ADJUSTING THE STITCH WIDTHS

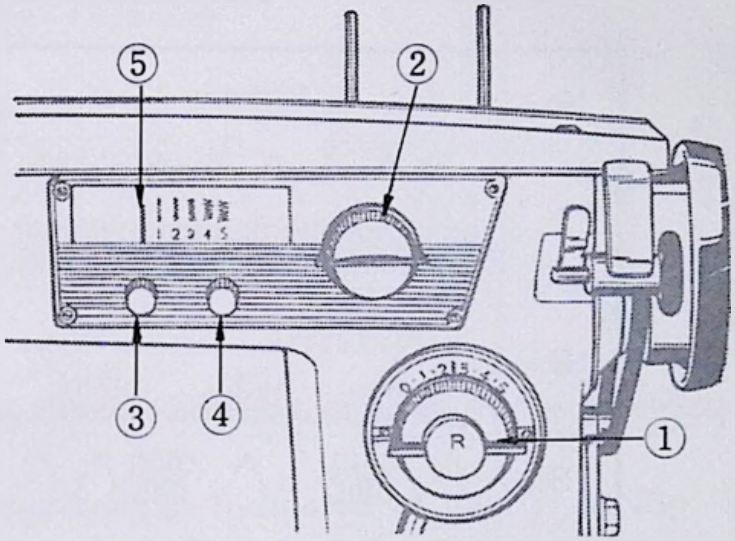

Fig. 23

(a) Turn the zigzag width restricting knob ④ to the right so that the zigzag width indicator ⑤ comes to the right by turning the zigzag width control dial ② clockwise.

(b) In this case, by locking knob ③, the desired zigzag width can be produced.

(c) Then simple zigzag patterns can be produced. In this case, by adjusting the length of the stitch with the dial ①, patterns similar to No. 1 (Flg. 24) can be produced.

(d) Varied fancy zigzag pattern can be produced by moving either the zigzag dial ② or the stitch length control dial ① while the machine is in operation. For instance, patterns Nos. 2, 3 & 4 (Fig. 24) can be produced in this manner.

Note : 1. When you sew some thin fabric, apply a thin sheet of paper to its reverse side and sew it together with the fabric, then the finished work will not pucker.

2. In zigzag sewing, loosening the upper tension slightly, and see that the lower thread does not apper on the surface of the cloth.

ZIGZAG STITCH PATTERNS

No.	Patterns	Stitch Length	Zigzag Width Control Dial
1		Long Short	Any point from 1 to 5
2		Long Short	Gradually move from 0 to 5, and return to 0. (Repeat)
3		Long and Short (Repeat)	Any point from 1 to 5
4		Long Short	Zigzag width can be regulated by zigzag width control dial. Turn quickly the dial alternately.

Fig. 24

MAKING BUTTONHOLES

(1) Preparatory Processes

(a) Raise the presser foot and turn the hand wheel towards you to bring the needle to its highest. Then exchange the regular presser foot with the special button hole foot as shown in Fig. 25.

(b) By turning the stitch width control dial clockwise lock the restricting knob so that the indicator can be set at"2".

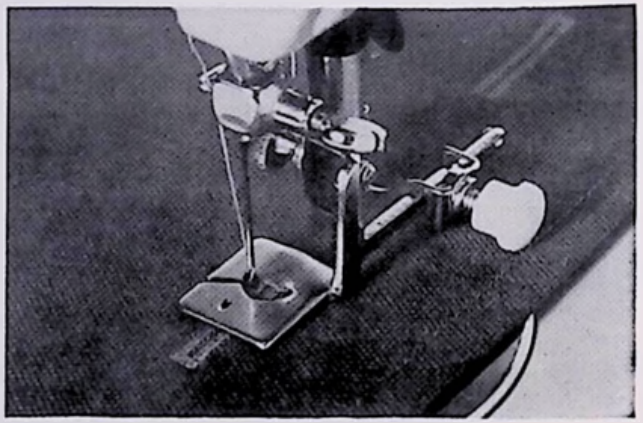

Fig. 25

(c) Set the stitch length control dial to the point between 0 and 1.

(d) Mark the length of the button hole on the cloth.

(e) You can do without a backing for a foundation, but if you use it the buttonhole looks much better.

(f) By giving a slightly strong tension to the upper thread, the finishing will become neater.

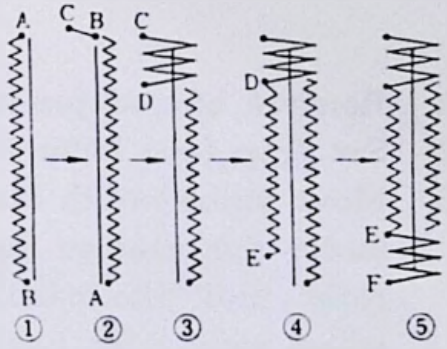

Fig. 26

(2) Actual Sewing

(a) Place the cloth beneath the buttonhole foot. In case a backing is used for a foundation, and lower the foot.

(b) When the whole length of the buttonhole has been sewn as indicated in No. ① of Fig. 26, stop operating the machine just as the needle has moved from the left side of the cloth to the right side.

(c) Raise the foot and turn the cloth around to the right. Then the sewn seam will come into the right side slot on the reverse side of the foot. (No. ②)

(d) Pull the cloth slightly towards you, turn the hand wheel and move the cloth a little to the right side.

(e) Turn the dial to the right and sew 5 or 6 stitches after making the sewing width wider. Then the upper bar tacking is made. (No. ③)

(f) Turn the dial to the left and sew the opposite row. (No. ④)

g) Repeat the operation mentioned in the above (e). Then the lower bar tacking is made. (No. ⑤)

(3) Finishing

The only thing left to slit the middle. Be careful not to cut the seams.

SEWING ON BUTTONS

1. Remove hinged presser foot and attach button sewing foot. (See Fig. 27).
2. Set drop feed lever to "DOWN" marked position.
3. Move stitch width dial to '0' position. Place the button so that its left hole comes directly under the needle. then gently lower the presser foot. Move the stitch width dial to the right until the needle comes exactly over the right hole of the button. Turn the hand wheel slowly by hand to be sure the needle clears both holes of the button. If you wish you may lock width by turning restricting knob to right.
4. When needle goes into the center of each hole, run the machine at medium speed, making five or six stitches, stopping with the needle in the left hole.
5. To lock the zigzag stitch and prevent raveing, set the stitch width at 0 and take a few stitches in the same hole. If you wish you may place a rounded toothpick over the button between the two holes, and sew button to fabric in regular way. Remove the toothpick and wind thread under button, forming a shank. Fasten.

   If a four hole button is to be sewn, follow the same procedure as above for the two hole button. Now lift presser foot slightly and move fabric to permit stitching the remaining two holes. Hooks, snaps, etc., are sewn to the fabric with the same procedure as for sewing two hole buttons.

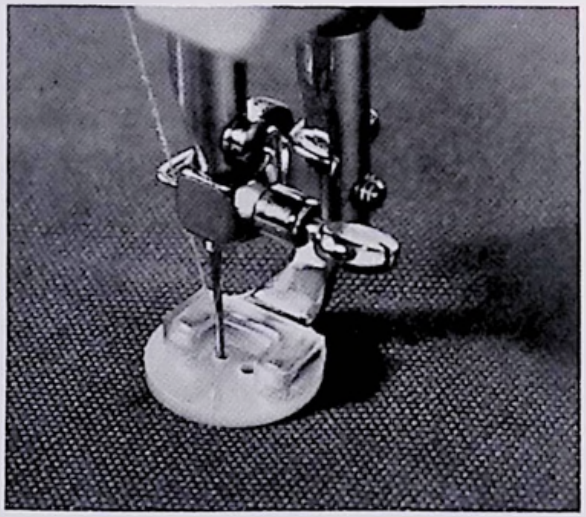

Fig 27

EMBROIDERING WITH A HOOP

It is easy to follow a stamped design or to work free hand when embroidering or monogramming. Release the pressure from the foot by pressing down the snap lock on the darner. Drop feed to "DOWN" position. Then hang the upper end of the embroidery spring on the needle clamp. (See Fig. 28).

Stretch the fabric in an embroidery hoop, and place under the needle after removing the presser foot. Set the stitch width at the size you prefer and lower the presser bar lifter. Then operate the machine at a rather high speed while moving the hoop slowly with both hands. Work carefully and be sure to keep fingers out of the needle.

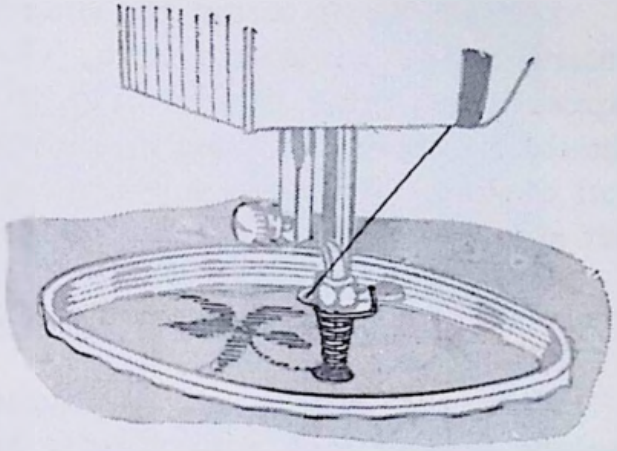

Fig. 28

THE ADJUSTABLE CORDING AND ZIPPER FOOT

This attachment is used to make and insert covered cording, and to sew in zippers. Loosen thumb screw to slide foot to either right or left of needle.

CORDING. Fold bias strip of fabric over cord. Loosen thumb screw and set foot so needle is centered in needle hole. Machine baste cord in place (Fig. 29)

To sew covered cord to material, reset adjustable foot so needle stitches closer to cord, and on edge of base fabric.

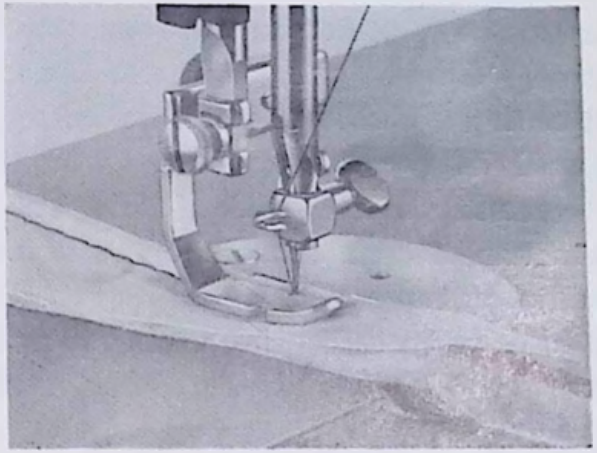

Fig. 29

SEWING IN ZIPPER

Loosen thumb screw and slide foot so needle enters center of needle hole. Guide metal of zipper along edge of foot (Fig. 30). Stitching should be close to zipper to allow easy opening and closing. Adjust to sew from either right or left side, which ever is more convenient.

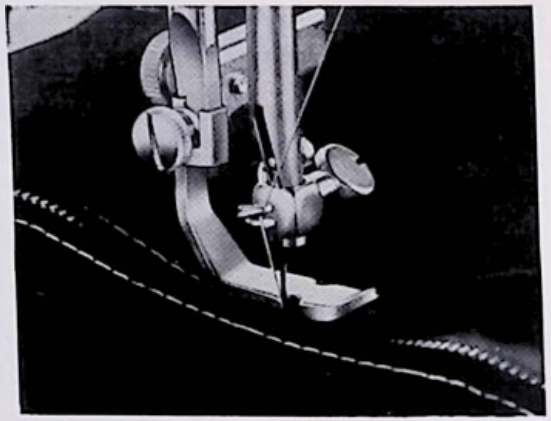

Fig. 30

NARROW HEMMER

With the needle at its highest position, replace presser foot with narrow hemmer (Fig. 31). For a plain narrow hem, make a 1/8 inch double fold for about two inches along edge of fabric. Hold each end of the two inch fold, slip underneath hemmer. Bring fold up into the scroll of hemmer, draw forward to end and fasten with point of needle. Lower presser bar lifter. Gently pull ends of thread as you start stitching. Guide material slightly to right, and it will take a double turn through scroll.

LACE TRIMMED HEM. To sew a narrow hem and attach lace in one stitching, insert lace in the slot next to needle (Fig. 32). Sew hem as above, guiding lace under needle and hem into scroll.

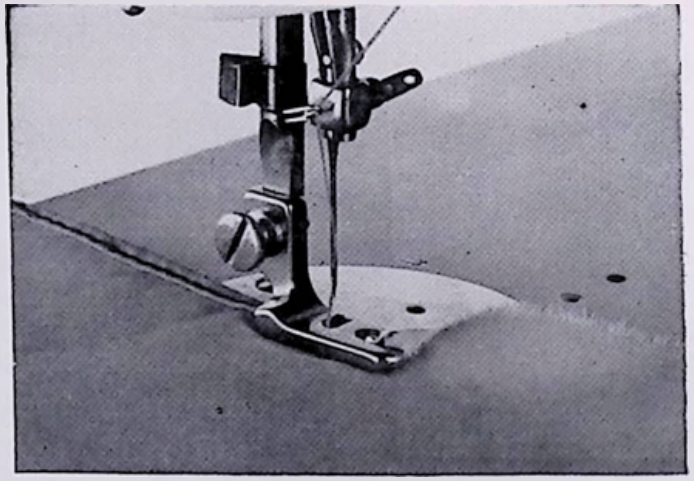

Fig. 31

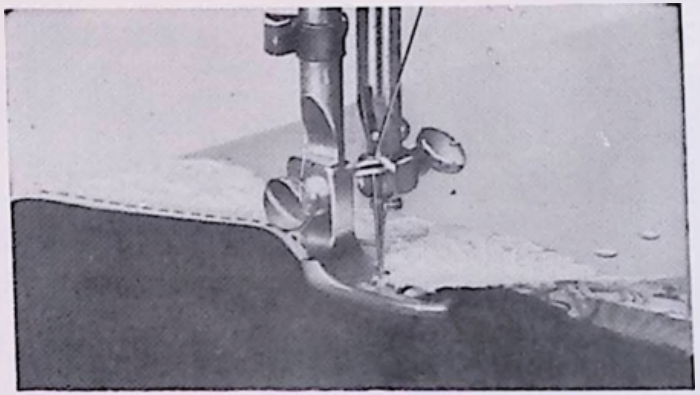

Fig. 32

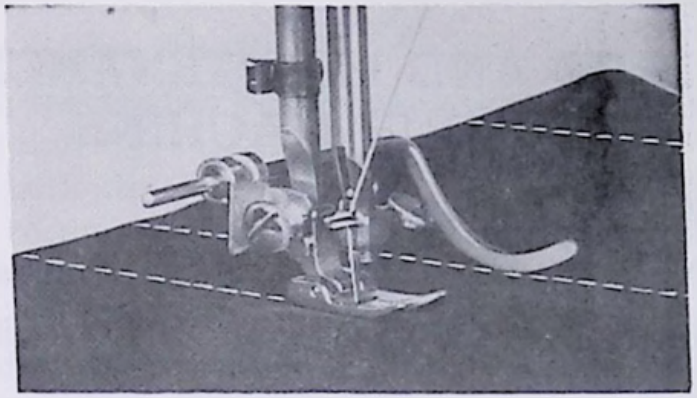

Fig. 33

QUILTING GUIDE

This guide for making parallel rows of stitching is attached by placing the pronged holder between the presser foot and the presser foot clamp screw (Fig. 33). Adjust the curved bar to press lightly on the fabric. By letting the guide ride on the first stitching line, successive rows will be an equal distance apart. When the bar is attached so that the curved part is to the right of the needle, it may also serve as a seam width guide.

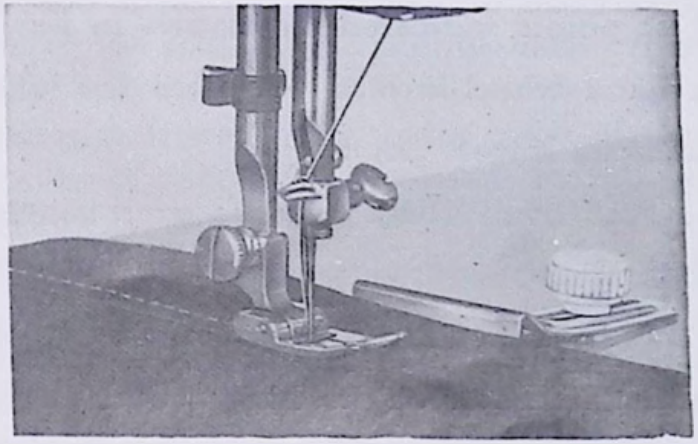

Fig. 34

SEAM GAUGE OR CLOTH GUIDE

Use the seam gauge as a guide for straight seams and even rows of top stitching along edges of fabric. Fasten gauge with accompanying screw in threaded hole in bole of machine (Fig. 34). Adjust to seam width desired.

CARE AND MAINTENANCE OF YOUR MACHINE

HOW TO OIL YOUR MACHINE

Your machine should be oiled occasionally to keep it operating smoothly. How often depends on the amount of sewing you do.

Before oiling the upper part of the sewing unit at points indicated by arrows in Fig. 35, turn hand wheel toward you until the take-up lever is its lowest point.

Avoid over-oiling. Only a drop is needed at each point.

To oil parts under the bed of the machine, tip the unit back on its hinges and apply a drop of oil at each point indicated in Fig. 36.

To oil moving parts inside the face plate, which only rarely require oiling, open plate and oil at spots indicated in Fig. 37.

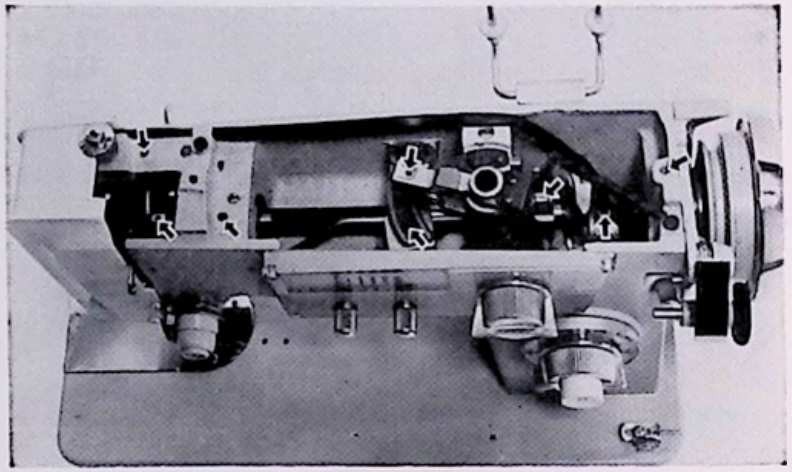

Fig. 35

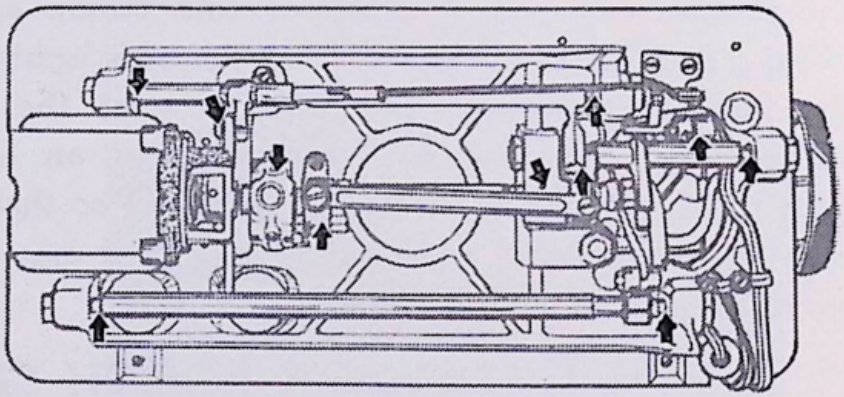

Fig. 36

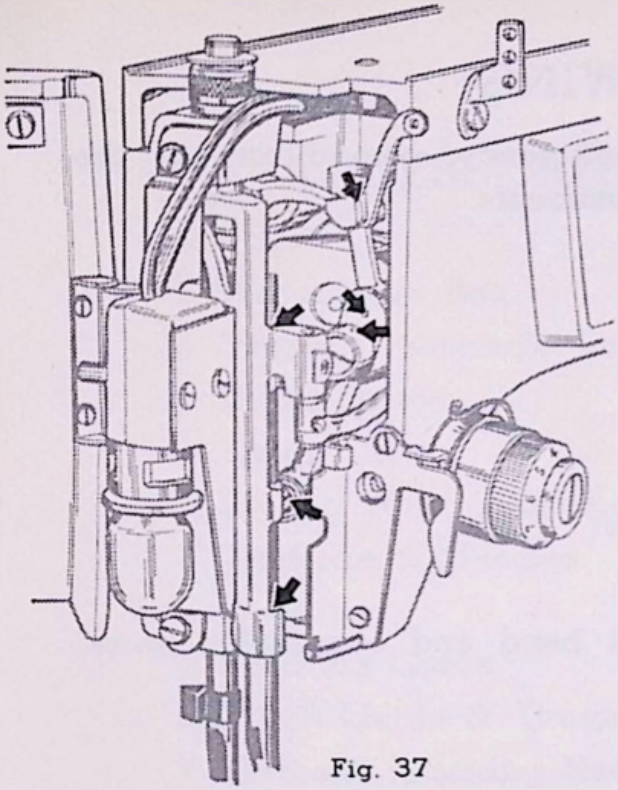

Fig. 37

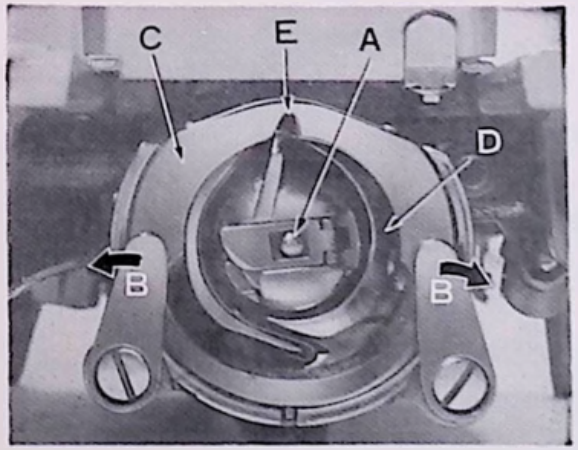

Fig. 38

CLEANING AND OILING THE SHUTTLE

(See Fig. 38)

The stitch forming mechanism occasionally becomes clogged with loose threads and lint.

This will interfere with the efficient operation of the machine. Cleaning and removal of the lint will safeguard the performance. To remove the shuttle assembly, proceed as follows :

1. Turn the hand wheel until the needle reaches its highest position. Tilt head back on its hinges.
2. Remove bobbin case (A), Fig. 38.
3. Turn the two shuttle race cover clamps (B) outward and remove the shuttle race cover (C) and shuttle body (D).
4. Clean the shuttle race, the shuttle, and shuttle race cover by removing all threads, lint, etc.
5. Apply a drop of oil with finger tip to outer edge of shuttle.

When the cleaning has been completed, proceed as follows to replace the shuttle assembly :

1. Turn the hand wheel until the needle reaches its highest position.
2. Place shuttle body, (D), against shuttle driver and adjust into position
3. Replace shuttle race cover, (C), fitting pin at lower edge into notch, and lock into position with shuttle race cover clamps, (B), making certain the clamps have been snapped securely into position.
4. Put bobbin into bobbin case.
5. Put the bobbin case into the shuttle race, fitting tongue into notch (E) of race cover.

CHECK UP FOR SMOOTH SEWING

Although your sewing machine is designed for maximum efficiency, should any of the following difficulties occur they can be remedied with minor adjustments.

Upper Thread Breaks ———

Be sure needle is inserted properly.

Check on correct way to thread machine.

Use correct needle size for thread.

Do not have upper tension too tight.

Lower Thread Breaks ———

Check correct method of threading bobbin case.

Be sure lower tension is not too tight.

Needle Breaks ———

Do not tug or pull on the fabric while sewing as this will bend and eventually break the needle.

Be sure presser foot is firmly attached to bar.

Skipped Stitches ———

Do not use a blunt or bent needle.

Insert needle correctly.

Use correct needle size for thread.

Be sure pressure on foot is sufficient when sewing heavy fabrics.

Stitches Loop ———

Make sure tensions are properly balanced and that machine is threaded correctly.

Machine Binds ———

Clean thread, dust and lint from body, shuttle and race.

If condition continues, it may be that the machine is gummy with oil. Apply kerosene to oil holes, run rapidly for a while, and wipe dry. Then lubricate again with fine sewing machine oil.

ACCESSORIES

1. Accessories Box
2. Ripper (Buttonhole Cutter)
3. Small Driver
4. Large Driver
5. Plastic Oiler (Sealed and filled)
6. Package of Needles
7. Bobbins
8. Quilting Guide
9. Cloth Guide & Thumb Screw
10. Straight Stitching Needle Plate
11. Straight Stitching Presser Foot
12. Embroidery Spring
13. Button Sewing Foot
14. Buttonhole Foot
15. Narrow Hemmer
16. Zipper Foot

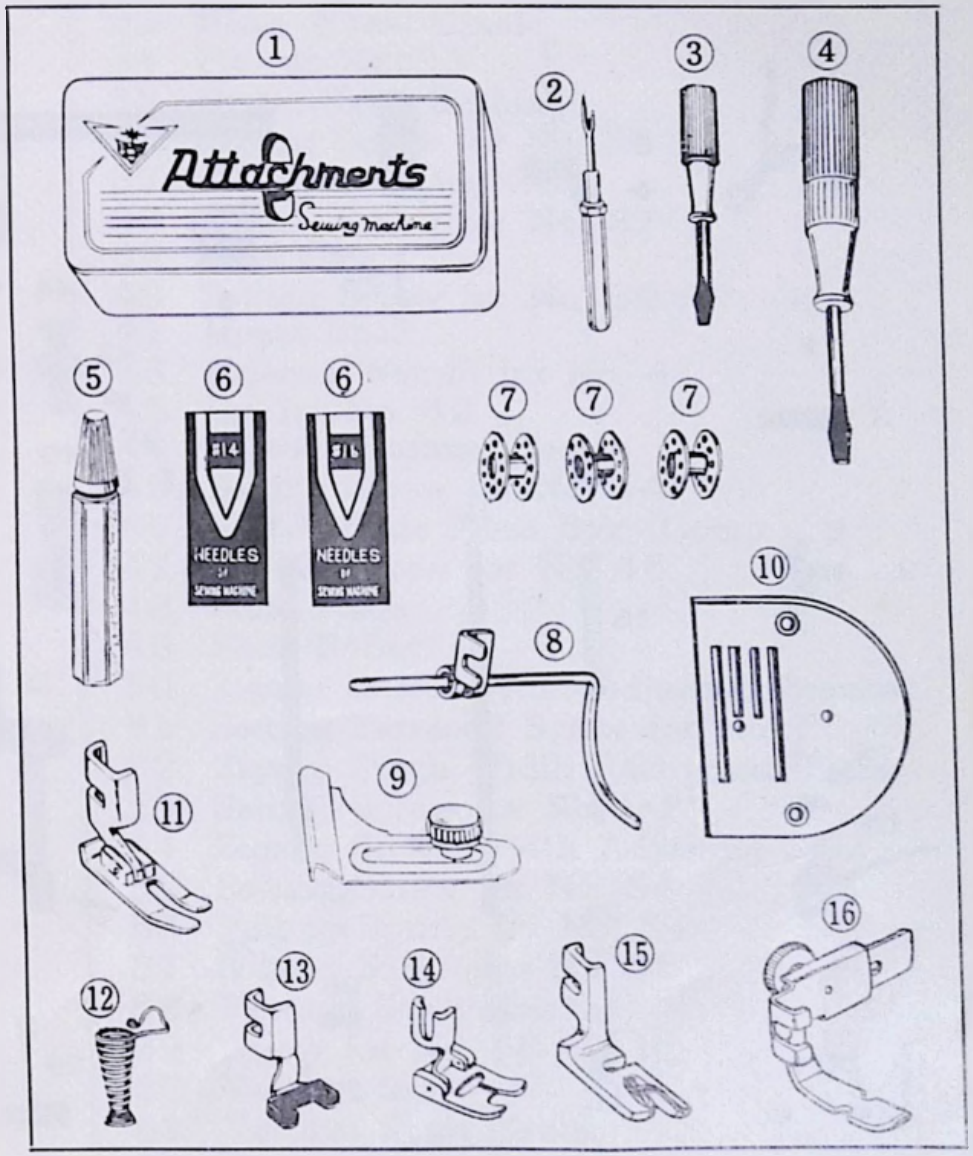

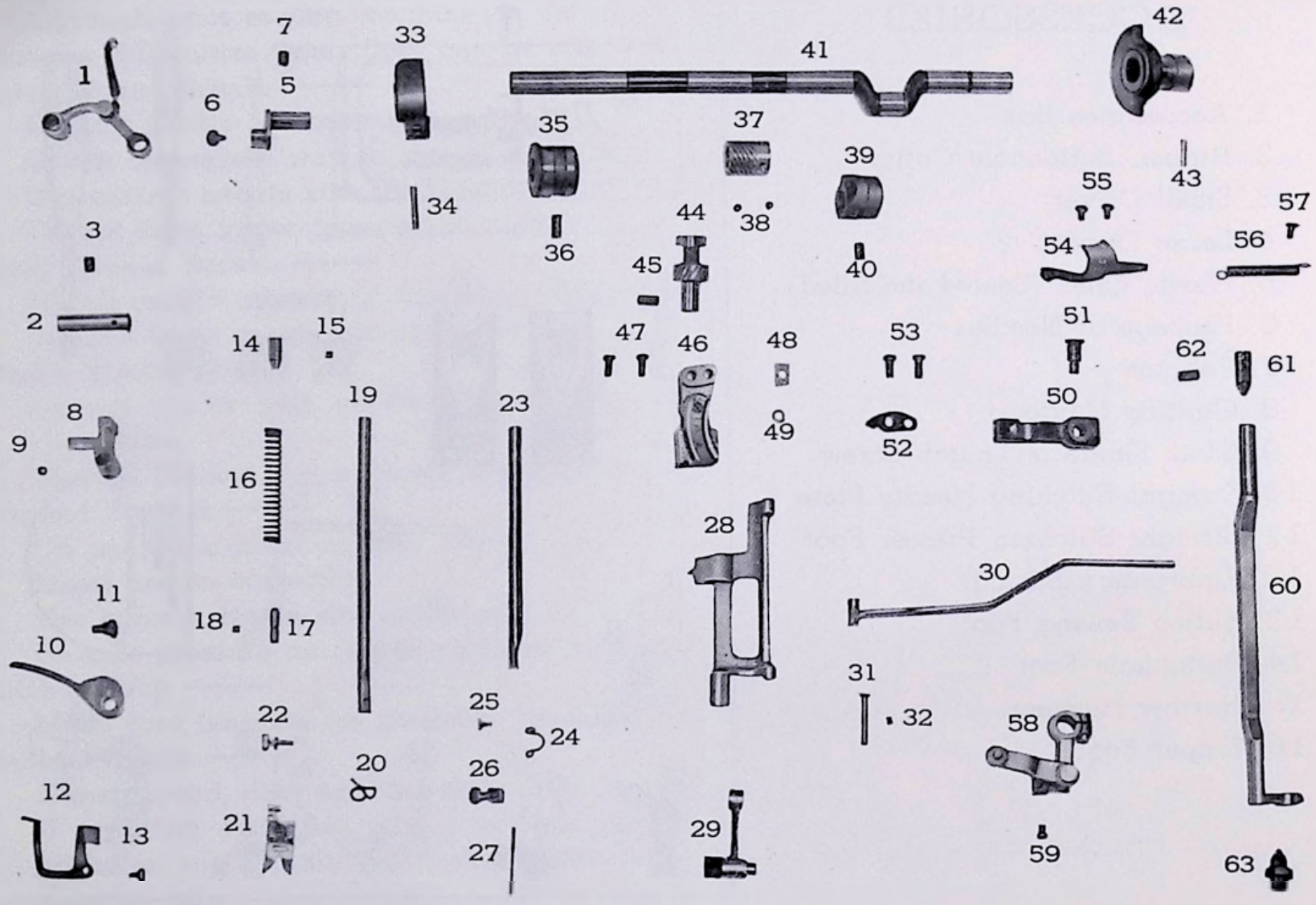
1
2
3
5
6
7
8
9
10
11
12
13
14
15
16
17
18
19
20
21
22
23
24
25
26
27
28
29
30
31
32
33
34
35
36
37
38
39
40
41
42
43
44
45
46
47
48
49
50
51
52
53
54
55
56
57
58
59
60
61
62
63

No.	Names of parts
1	Thread Take-up Lever (Comp.)
2	Thread Take-up Lever Rod Shaft
3	Setting Screw for No. 2
5	Needle Bar Crank Pin
6	Setting Screw for No. 5
7	Setting Screw for No. 5
8	Presser Bar Spring Bracket
9	Setting Screw for No. 8
10	Presser Lifter
11	Setting Terraced Screw for No. 10
12	Tension Releaser Link
13	Setting Terraced Screw for No. 12
14	Presser Bar Screw
15	Setting Screw for No. 14
16	Presser Bar Spring
17	Presser Bar Pin
18	Setting Screw for No. 17
19	Presser Bar
20	Thread Cutter
21	Presser Foot for Zigzag Stitch
22	Presser Foot Thumb Screw
23	Needle Bar
24	Needle Bar Thread Guide
25	Setting Screw for No. 24
26	Needle Clamp W/Screw
27	Needle
28	Needle Bar Bracket
29	Needle Bar Crank Rod (Comp.)
30	Needle Bar Connecting Link
31	Pin for No. 30
32	Setting Screw for No. 31

No.	Names of parts
33	Hand Wheel Crank
34	Pin for No. 33
35	Upper Shaft Bushing
36	Setting Screw for No. 35
37	Zigzag Stitching Gear
38	Setting Screw for No. 37
39	Feed Cam
40	Setting Screw for No. 39
41	Upper Shaft
42	Balance Weight for No. 41
43	Pin for No. 42
44	Zigzag Stitching Cam
45	Setting Screw for No. 44
46	Zigzag Slide Piece Box (Comp.)
47	Setting Screw for No. 46
48	Slide Piece
49	Slide Roller
50	Zigzag Stitch Width Adjusting Bracket
51	Setting Terraced Screw for No. 50
52	Zigzag Stitch Width Restricting Plate
53	Setting Screw for No. 52
54	Zigzag Stitch Width Adjusting Joint
55	Setting Screw for No. 54
56	Pulling Spring for No. 54
57	Setting Screw for No. 56
58	Vertical Shaft Bracket
59	Screw for No. 58
60	Vertical Shaft
61	Vertical Shaft Center
62	Setting Screw for No. 61
63	Screw Center W/Nut

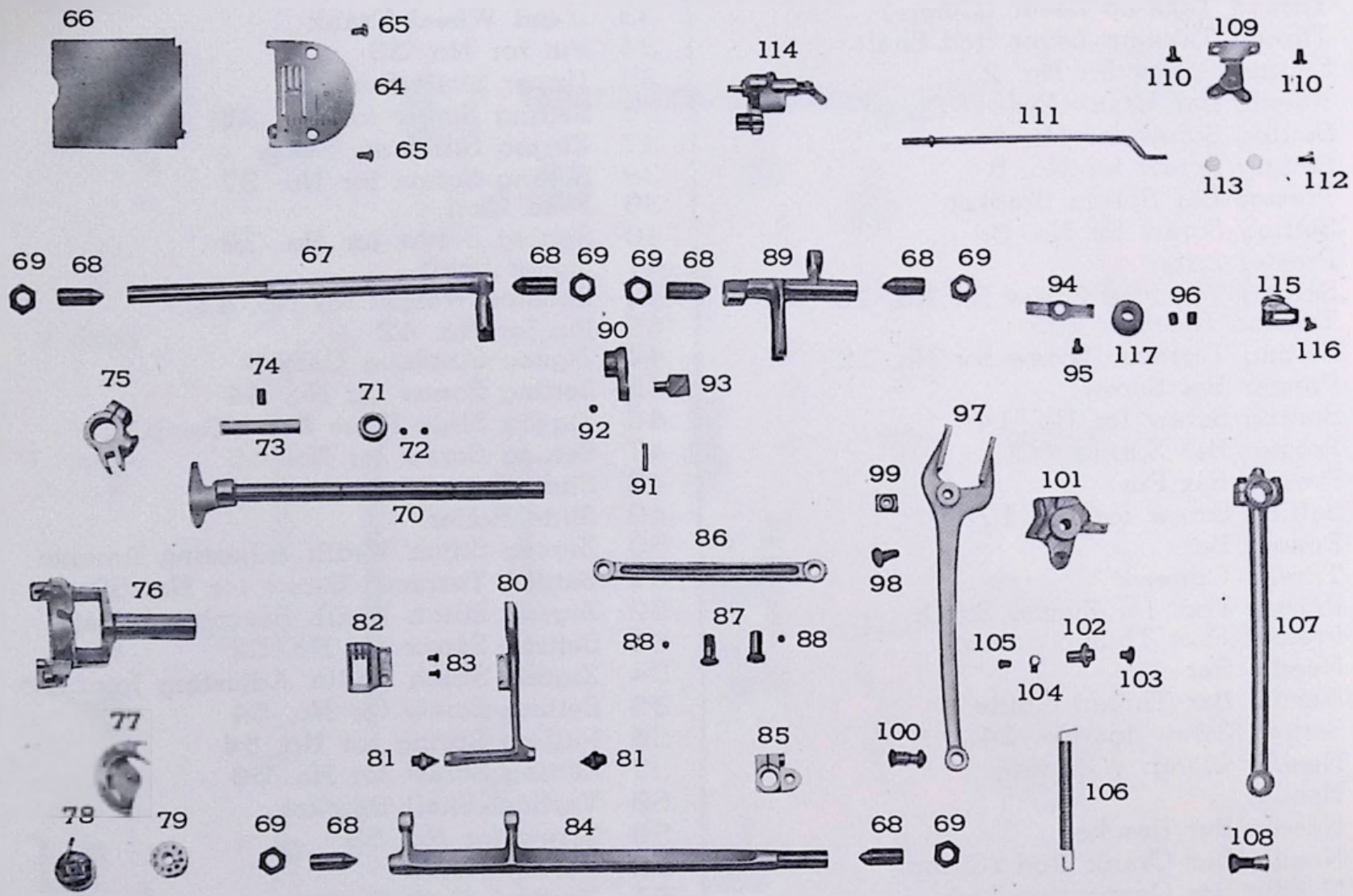
66
65
64
65
114
109
110
110
111
113
112
69
68
67
68
69
69
68
89
68
69
94
96
115
90
95
117
116
75
74
71
93
73
72
92
91
97
99
101
70
86
98
76
80
82
87
88
88
105
102
107
83
104
103
77
81
81
85
100
106
78
79
69
68
84
68
69
108

No.	Names of parts
64	Needle Plate for Zigzag Stitching
65	Setting Screw for No. 64
66	Bobbin Cover Plate
67	Feed Lifting Shaft
68	Screw Center
69	Setting Nut for No. 68
70	Lower Shaft W/Shuttle Driver (Comp.)
71	Collar for No. 70
72	Setting Screw for No. 71
73	Shuttle Race Guide Pin
74	Setting Screw for No. 73
75	Shuttle Race Guide
76	Shuttle Race (Comp.)
77	Shuttle Body
78	Bobbin Case
79	Bobbin
80	Feed Bar
81	Feed Bar Screw Center W/Nut
82	Feed Dog
83	Setting Screw for No. 82
84	Feed Rocking Shaft
85	Feed Rocking Shaft Bracket
86	Shuttle Race Connecting Rod
87	Pin for No. 86
88	Setting Screw for No. 87
89	Oscillating Rock Shaft
90	Lower Shaft Crank
91	Tapered Pin for No. 90

No.	Names of parts
92	Setting Screw for No. 90
93	Lower Shaft Crank Slide Block
94	Lamp Cord Fixing Metal (Bed Side)
95	Setting Screw for No. 94
96	Head Hinge Binder Screw
97	Forked Rod
98	Feed Regulator Slide Axis Screw
99	Feed Regulator Slide Piece
100	Forked Rod Hinge Screw W/Nut
101	Feed Regulator Box
102	Setting Axis for No. 101
103	Setting Screw for No. 102
104	Feed Regulator Washer
105	Setting Screw for No. 104
106	Feed Regulator Pulling Spring
107	Crank Rod
108	Crank Rod Hinge Tapered Screw W/Nut
109	Drop Feed Plate
110	Setting Screw for No. 109
111	Drop Feed Connecting Rod
112	Setting Terraced Screw for No. 109 & 111
113	Vinyl Washer for No. 112
114	Drop Feed Body (Comp.)
115	Bobbin Winding Tension (Comp.)
116	Setting Screw for No. 115
117	Rubber Ring for Bed

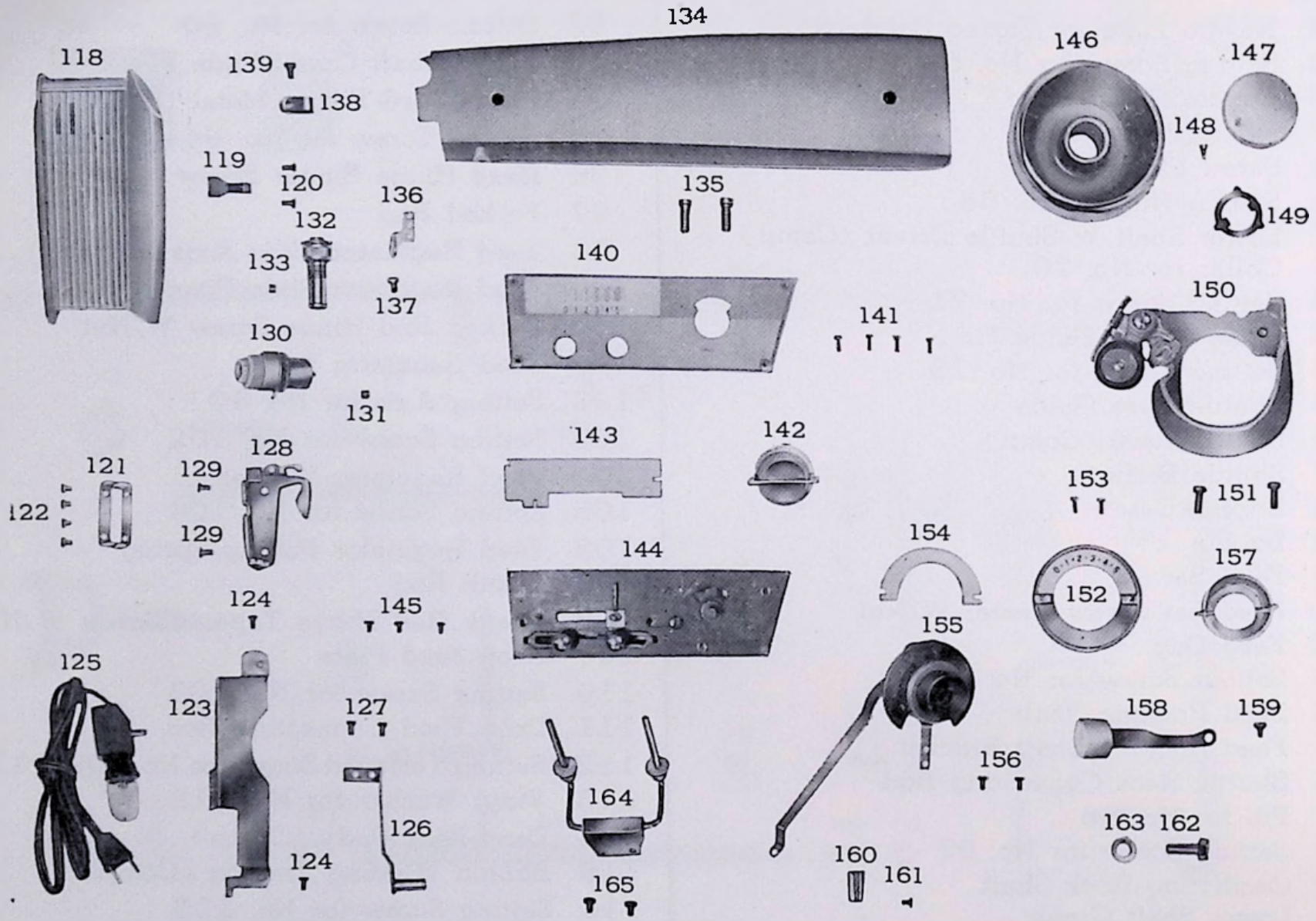
118
139
138
134
146
147
148
119
120
136
135
149
132
133
137
140
141
150
130
131
143
142
128
121
129
122
129
153
151
154
144
157
152
124
145
155
125
123
127
158
159
156
164
126
163
162
124
160
161
165

No.	Names of parts
118	Face Plate
119	Face Plate Spring
120	Setting Screw for No. 119
121	Face Plate Hinge
122	Setting Screw for No. 121
123	Lamp Socket Setting Plate
124	Setting Screw for No. 123
125	Lamp (Comp.)
126	Lamp Switch
127	Screw for No. 126
128	Thread Guide Plate
129	Setting Screw for No. 128
130	Thread Tension Regulator (Comp.)
131	Setting Screw for No. 130
132	Pressure Release (Comp.)
133	Setting Screw for No. 132
134	Top Plate
135	Setting Screw for No. 134
136	Arm Thread Guide
137	Setting Screw for No. 136
138	Lamp Cord Fixing Metal (Left Side of Arm)
139	
140	Zigzag Width Indicating Plastic Plate
141	Setting Screw for No. 140
142	Zigzag Stitch Width Control Dial

No.	Names of parts
143	Zigzag Width Indicator Back Screen
144	Zigzag Stitch Width Control Foundation (Comp.)
145	Setting Screw for No. 144
146	Hand Wheel
147	Stop Motion
148	Setting Terraced Screw for No. 147
149	Stop Motion Clamp Washer
150	Bobbin Winder (Comp.)
151	Setting Screw for No. 150
152	Stitch Length Indicating Plastic Plate
153	Setting Screw for No. 153
154	Stitch Length Indicator Back Screen
155	Stitch Length Control Foundation (Comp.)
156	Setting Screw for No. 155
157	Stitch Length Control Dial
158	Reverse Push Button W/Link
159	Setting Terraced Screw for No. 158
160	Drop Feed Control Lever
161	Setting Screw for No. 160
162	Motor Bracket Set Screw
163	Washer for No. 162
164	Spool Pin Bracket
165	Setting Screw for No. 164

M E M O

Printed in Japan